SONORA PROFESSIONAL SERVICES INTÉGRATION AUDIOVISUELLE

BenQ

Professional Enterprise Display Series

CP05

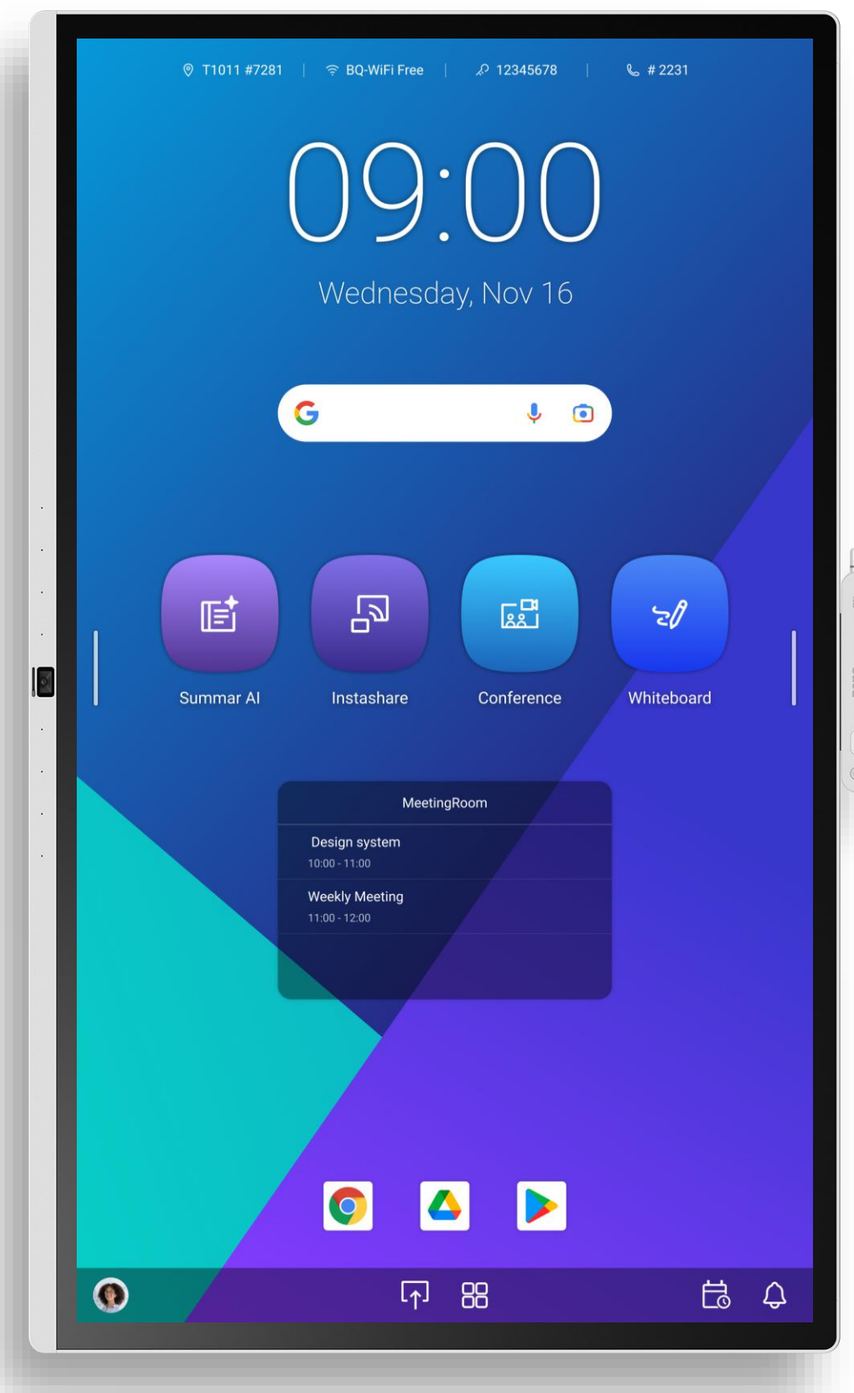



*CP5505 supports landscape and portrait orientation.

Your meeting, Your way – powered by AI

Key Features

PCAP Touch Panel
High durability, multi-touch support for advanced gestures, excellent optical clarity

Octa Core SoC
The most powerful IFP SoC (A78x2 + A55x6)
Made in Taiwan, powered by TSMC

10 TOPS
High computing performance for AI processing 10 trillion operations per second

Android 15
The latest & most secured Android OS

16GB RAM, 256GB Storage
Fast performance with plenty of storage

90W Built-in Speaker
25W x 2 speakers, 40W x 1 subwoofer (75")
15W x 2 speakers (55")

Built-in Microphone
8 array, up to 12M pick up distance
AI echo cancellation, AI noise reduction

EDLA BenQ Board
With Google Certified Platform for reliable, versatile applications across enterprise workflows

Active Stylus
With powerful functionality

NFC Sensor
Access your account in seconds

50MP Camera
Built-in 4K 50MP camera with 160° FOV, AI Auto Framing, AI Auto Gallery

90% NTSC color gamut
Validated by Pantone for pro-grade precision

Pantone and SkinTone
World's 1st Pantone validated and Pantone SkinTone validated show you a vivid new world

PANTONE Validated
PANTONE SkinTone Validated

Healthcare Design
Germ-resistant touch screen with anti-glare, flicker-free, and low blue light emission

TÜVRheinland CERTIFIED
SIAA ISO22196 for KOHKIN

Technical Specifications

The CP5505 and CP7505 Professional Display Series are engineered with cutting-edge technology to deliver superior performance and reliability. Below are the detailed technical specifications for the display, touch technology, and processing capabilities.

Display Specifications

Panel Type	IPS
Screen Size	55" / 75" diagonal
Resolution	3840 × 2160 UHD (4K)
Pixel Pitch	0.315mm (55") / 0.4305mm (75")
Brightness	450 nits
Contrast Ratio	1200:1 (typical), 50,000:1 (dynamic)
Color Gamut	90% NTSC
Viewing Angles	178° (H) / 178° (V)
Response Time	8ms
Light Life	50,000 hours
Panel Depth	10-bit
Surface Treatment	Anti-glare, Germ-resistant

Touch Technology

Touch Type	PCAP
Glass	3.0mm tempered glass, 9H hardness
Touch Points	Up to 50
Touch Resolution	32767 × 32767
Touch Latency	<CP7505: <10ms; CP5505: <8ms
Active Pens	CP7505: Active Pen x 1, Passive Pen x 1; CP5505: Passive Pen x 2
Palm Rejection	Yes

Processing & Memory

CPU	Octa-core (A78×2 + A55×6)
NPU	10 TOPS AI processing
RAM	16GB
Storage	256GB
Operating System	Android 15.0 (Google Certified)

Connectivity & I/O Specifications

The CP5505 and CP7505 Professional Display Series offer a comprehensive suite of connectivity options, ensuring seamless integration into any corporate environment. From robust wired inputs to advanced wireless capabilities and high-fidelity camera and audio systems, these displays are designed for maximum versatility and performance.

Input/Output Ports

HDMI in | out	2.0 (4K@60Hz support) | NA
USB Type-A	2 × 3.0
USB Type-B	NA
USB Type-C	Rear: 1 x 2.0 IN 1 x 3.0 OUT (data / video out / audio out / touch) Down: 1 x 3.0 IN (5Gbps data transfer / video / audio / touch / 65W PD charging)
Audio	3.5mm earphone jack
Network	2× Gigabit LAN (RJ45)
Control	RS232 serial port
Expansion	OPS (Open Pluggable Specification) slot

*The USB-C out port supports touchback function when HDMI IN is connected, enabling touch signal return to the connected laptop.

Wireless Connectivity

Wi-Fi	6.0
Bluetooth	5.4
NFC	Built-in sensor

Camera & Audio

Camera System

- 4K 50MP 4K UHD
- AI auto framing
  AI auto tracking
- AI Auto Gallery
- 160° viewing angle
  120° horizontal
  80° vertical
- Gesture control
- Privacy cover

Audio Performance

- 8 microphone array
- Up to 12M pick up distance
- AI Noise Reduction
  AI Echo cancellation
- Voice Tracking

CP7505
2× 25W +
40W subwoofer

CP5505
2× 15W

Environmental & Power

Power Supply	AC 100-240V, 50-60Hz
Operating Temperature	0°C to 40°C
Storage Temperature	-20°C to 60°C
Humidity	10% to 90% (non-condensing)
Certifications	CE, FCC, others by regions, and Energy Star Germ-resistant: SIAA, TUV; IP5X: SGS; Flicker Free: TUV; Low Blue Light: TUV Pantone Validated; Pantone SkinTone Validated

Software Features & Management Solutions

The CP5505 and CP7505 Professional Display Series integrate advanced software features and robust management solutions to enhance productivity, collaboration, and administrative efficiency across various professional environments.

Professional Display Modes

Tailor your display experience with specialized modes designed for optimal performance in specific applications:

DICOM Mode

For medical imaging, providing accurate grayscale display for clinical reviews.

M-Book Mode

Optimized for design and creative work, ensuring color accuracy and detail for graphic professionals.

ePaper Mode

A grayscale mode that makes sketches easier to view by adding warmth, soft contrast, and lower brightness to feel like paper.

High Detail Mode

For precision applications, bringing out fine details in engineering drawings and complex visuals.

Standard Mode

Balanced settings for general use, offering vibrant visuals for everyday content.

Pantone Mode

For better color matching with Pantone standards.

Management & Control Systems

Effortlessly manage your fleet of displays with BenQ's comprehensive suite of tools:

AMS (Account Management System)

Streamline user authentication and access control across multiple devices.

IAM (Identify and Access Management)

Manage all your BenQ services (X-Sign, AMS, DMS) in one account by SSO (Single sign-on).

DMS (Device Management System)

Enable remote monitoring, control, and maintenance of all connected displays. Maintain oversight and manage large deployments of displays from a central location.

SummarAI

Leverage AI-powered meeting summarization for efficient post-meeting follow-ups.

MeetingRoom

A smart scheduling app that connects Microsoft 365 and Google Workspace, streamlining room booking and meeting management.

EZWrite 6 (Interactive Whiteboard Solution)

Let your ideas take the lead on a variety of platforms with EZWrite 6.
Support 49 languages for handwriting recognition, 37 languages for OCR (Optical Character Recognition), 67 languages for TTS (Text to Speech)

InstaShare 2 (Wireless Casting Solution)

Share ideas with a single click.
Up to 9 shared screens.



Collaboration Features

Enhance interactive sessions and remote participation with a rich set of collaboration tools:

Auto framing for video calls
Automatically adjusts the camera view to keep all participants centered.

Gesture tracking and control
Intuitive interaction with the display using natural hand gestures.

Voice tracking capabilities
Focuses audio capture on the active speaker for clear communication.

Room and Face View mode
Keeps track of up to 10 participants in smaller windows, while displaying the panoramic view in the main window.

Gallery mode for presentations
Presents up to 4 participant windows in a clean, organized grid layout.

Screen sharing and wireless casting
Seamlessly share content from personal devices without cables.

Multi-device connectivity
Connect and switch between various devices with ease.



Google Services and Google Play

BenQ smart displays empower enterprises to access pre-installed Google services and Google Play apps for greater productivity.



Smart Tools Powered by Google AI

Enhance meetings with AI-driven solutions, including intelligent cameras, wireless content sharing, and interactive digital whiteboarding.



Google Trusted Enterprise-Grade Security

Google Play Protect safeguards BenQ smart displays by preventing harmful app installations and removing malicious apps.

Creativity without limits

The CP series active stylus features powerful functionality in a small design, allowing you to swiftly move between tasks by capturing voice notes or instantly accessing AI-powered features

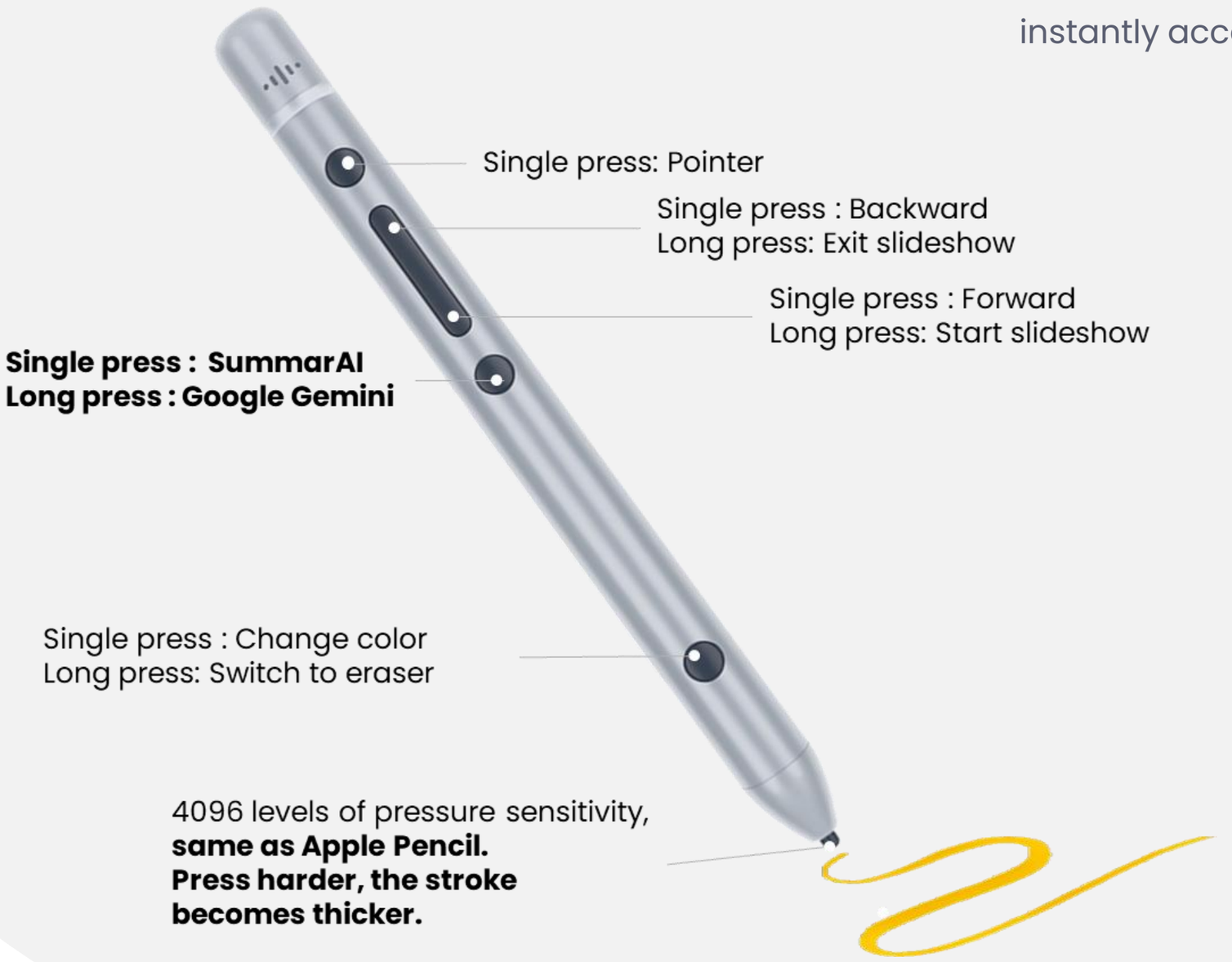

Unleash powerful connectivity

The CP05 series provides a wide selection of essential ports—including USB-C, USB 3.0, HDMI, and mic-in—for seamlessly connecting any device or peripheral.

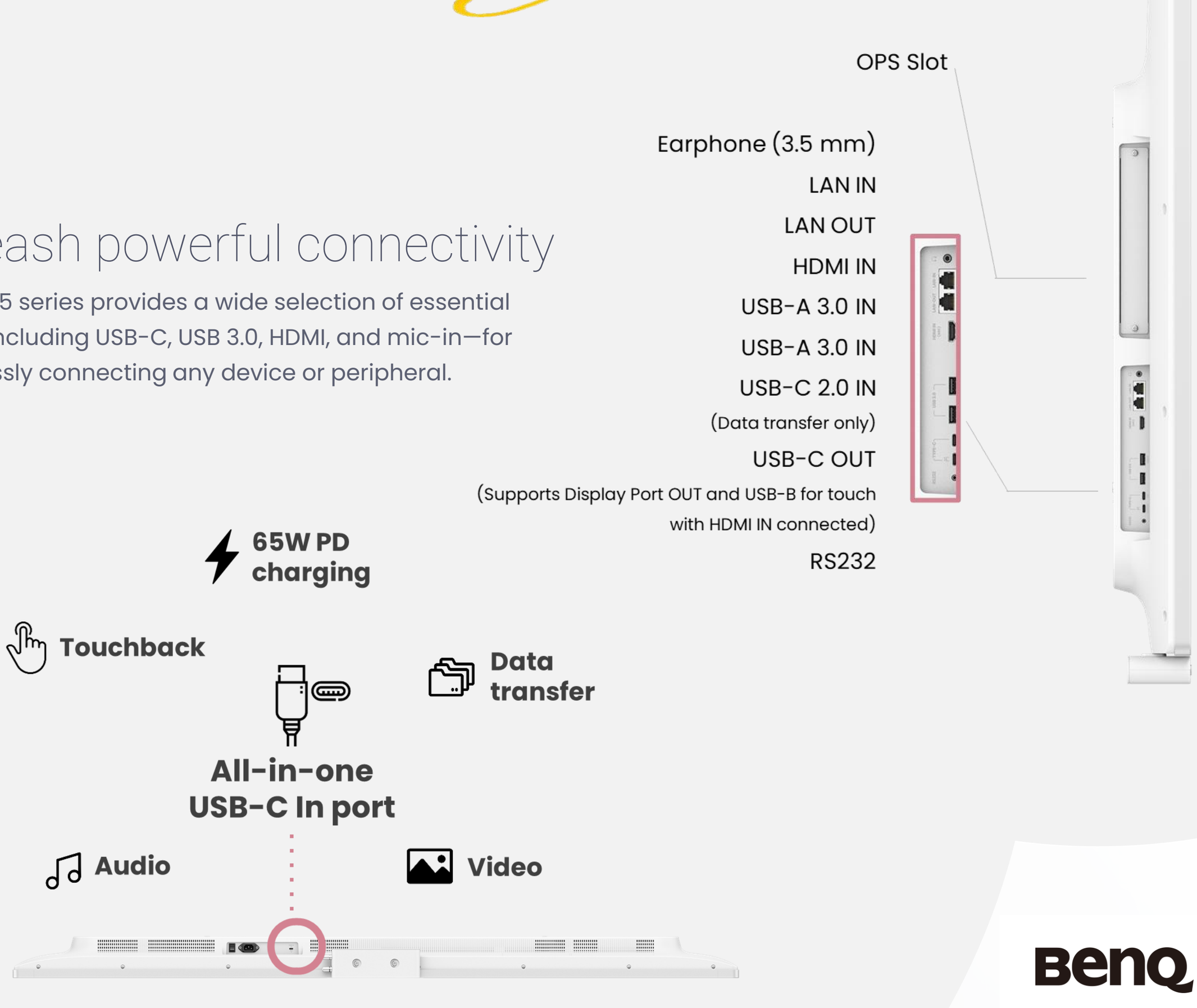

CP5505

Dimension (WxHxD) (Without Packing/With Packing)	1272.8 x 799.6 x 85.7mm/ 1380 × 880 x 200 mm
Net Weight/Gross Weight	32.4kg/40.6kg
VESA Mount/Screws	400 x 400mm/4 – M6 x 20mm

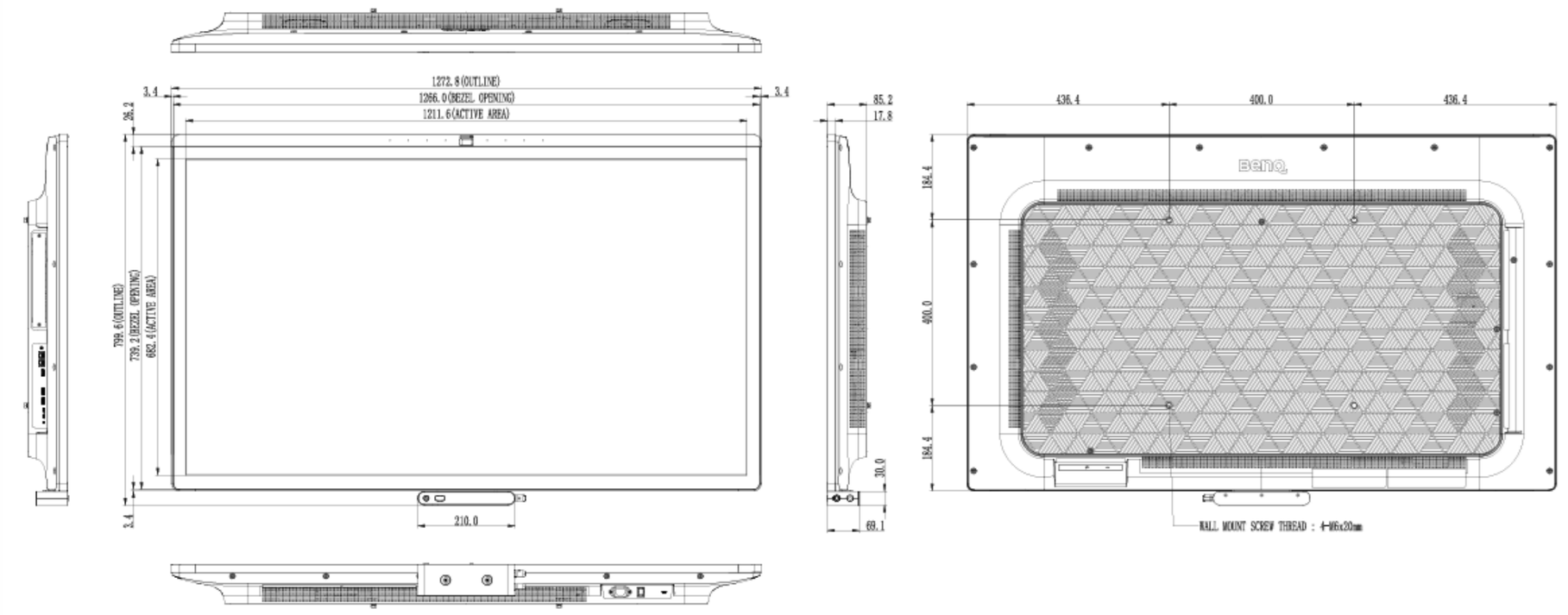

CP7505

Dimension (WxHxD) (Without Packing/With Packing)	1720.7 x 1052.7 x 98.5mm/ 1880 × 1135 x 220mm
Net Weight/Gross Weight	55kg/74kg
VESA Mount/Screws	800 x 400mm/4 – M8 x 25mm

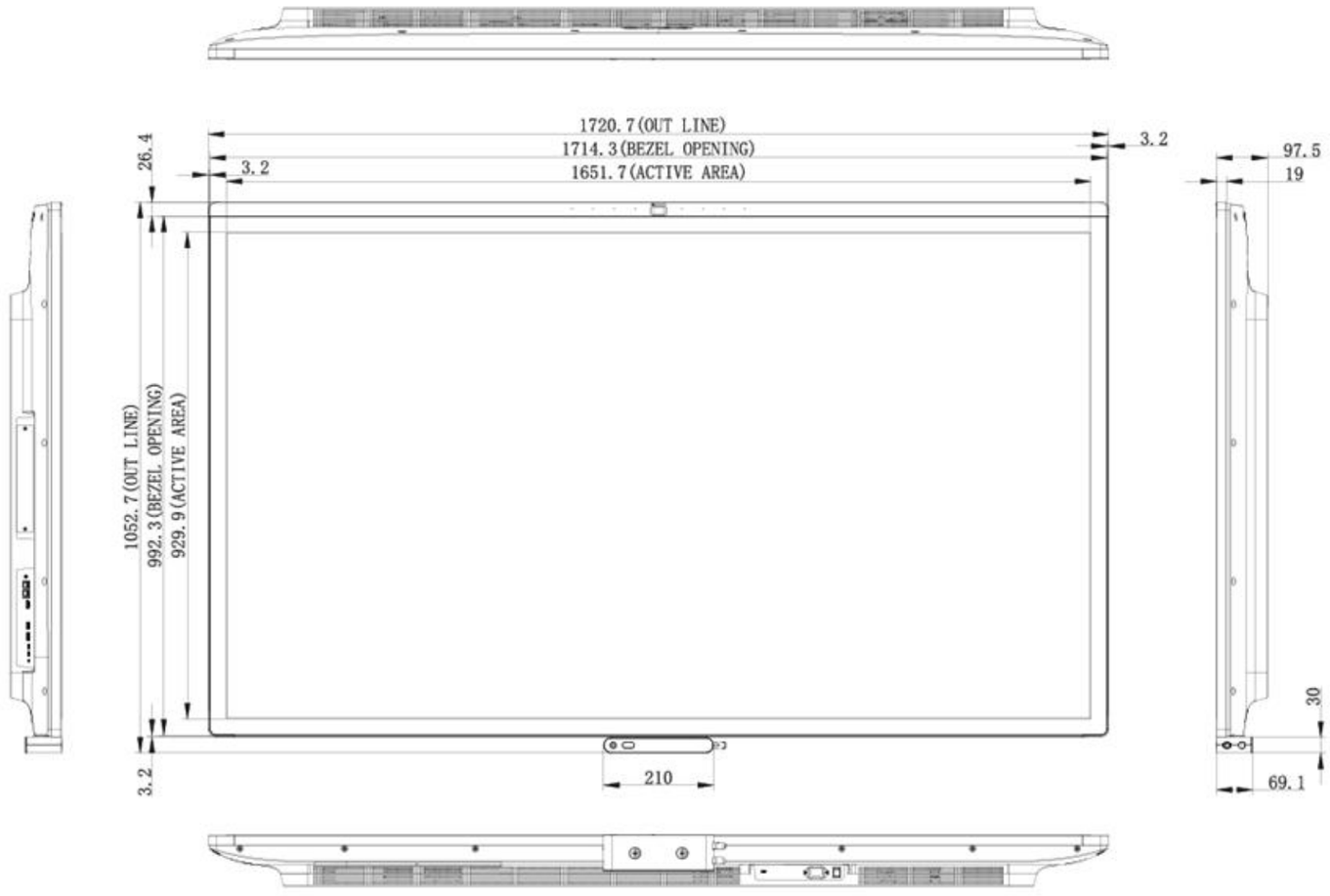

Accessories

- HDMI cable (3M) x 1
- Type-C cable (1.5M) x 1
- Type-C to A cable (3M) x 1
- R232 cable (1.8M) x 1

Display Languages

English / French / German / Dutch / Polish / Russian / Czech / Danish / Swedish / Italian / Romanian / Finnish / Norwegian / Greek / Hungarian / Spanish / Portuguese / Traditional Chinese / Simplified Chinese / Arabic / Japanese / Thai / Persian / Vietnamese / Korean / Turkish / Indonesian / Hebrew / Catalan (29L)